ECU Rotary 36-1 SPCL
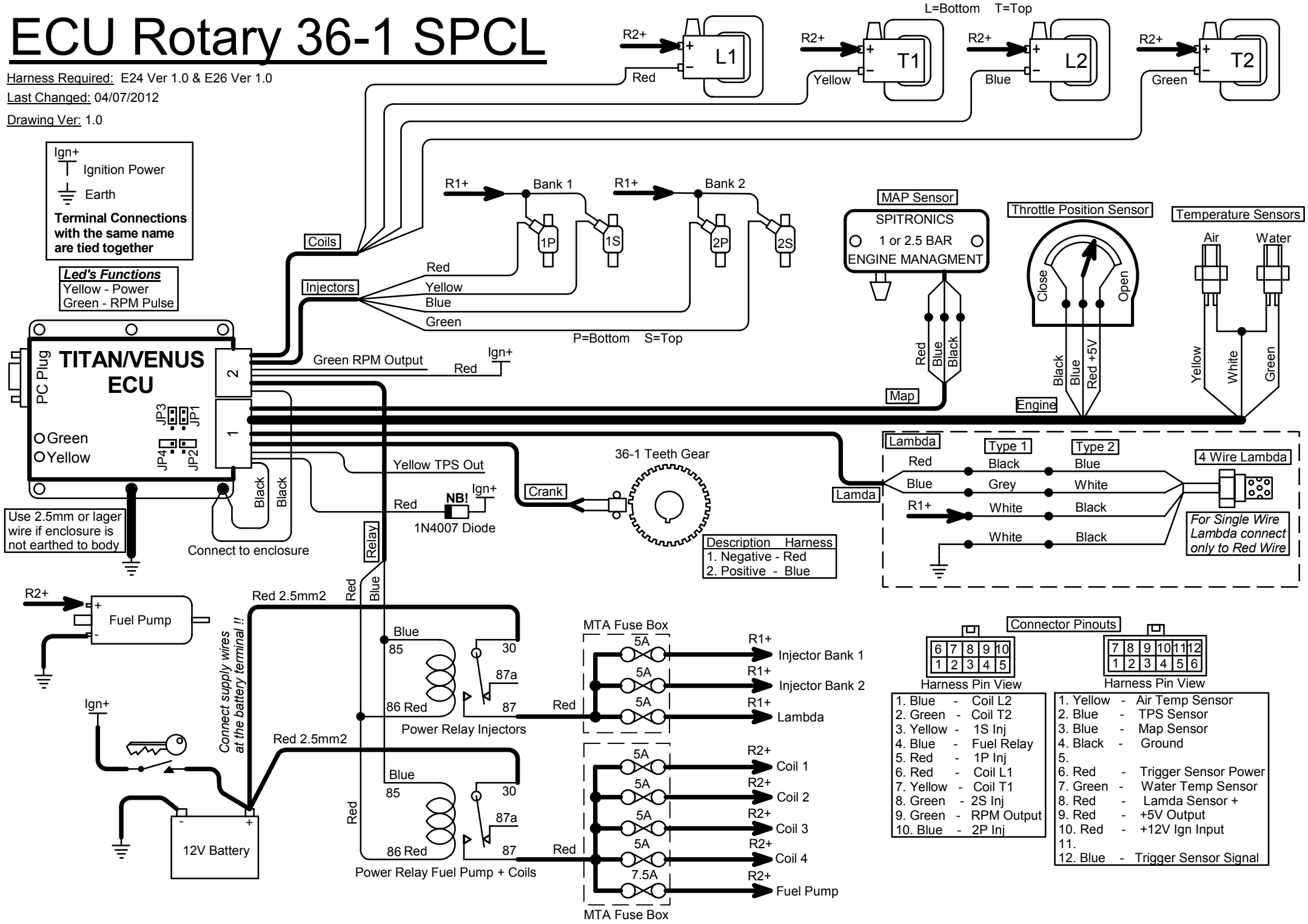
Harness Required: E24 Ver 1.0 & E26 Ver 1.0
Last Changed: 04/07/2012
Drawing Ver: 1.0